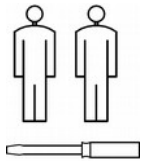

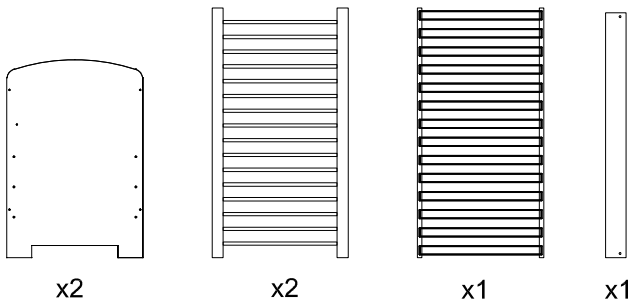
x2
x2
x1
x1

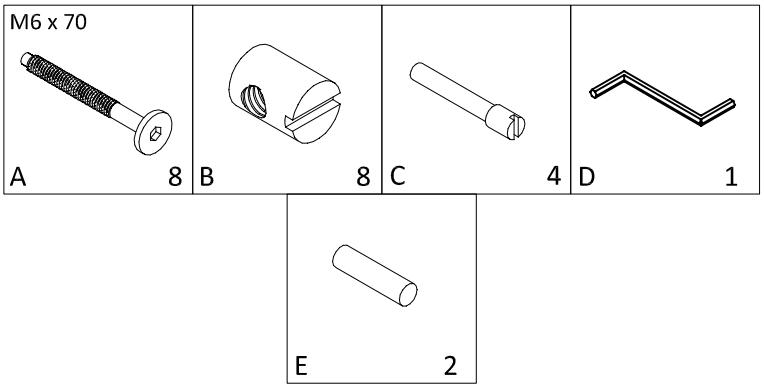
M6 x 70
A 8
B 8
C 4
D 1
E 2

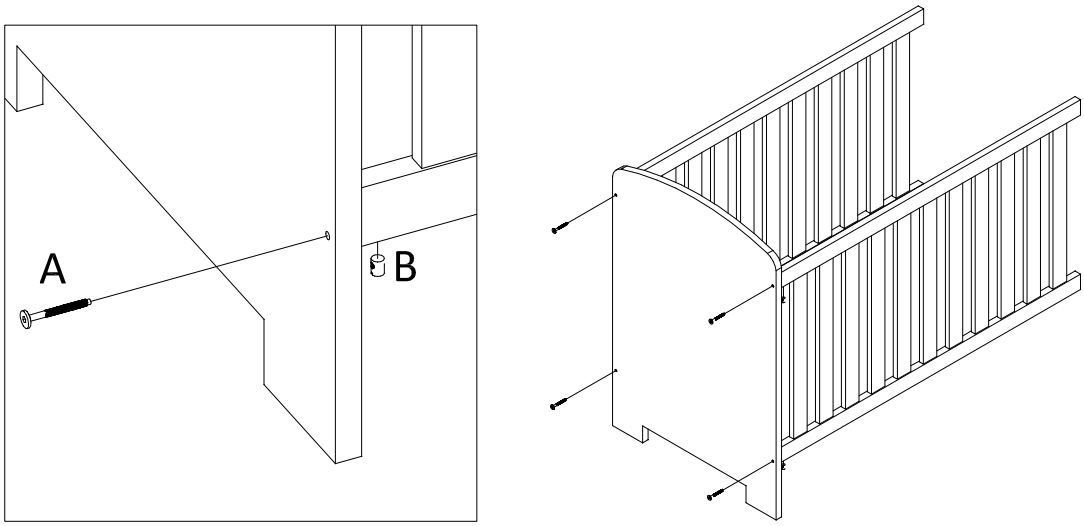
A
B

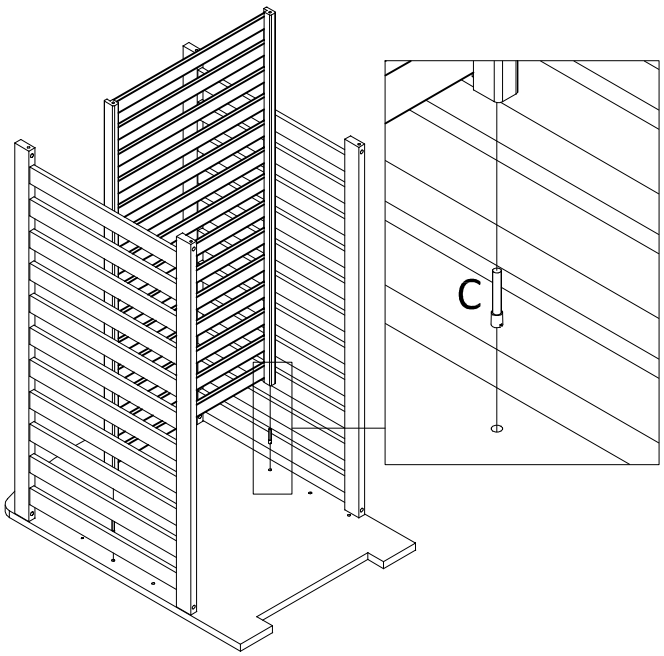
C

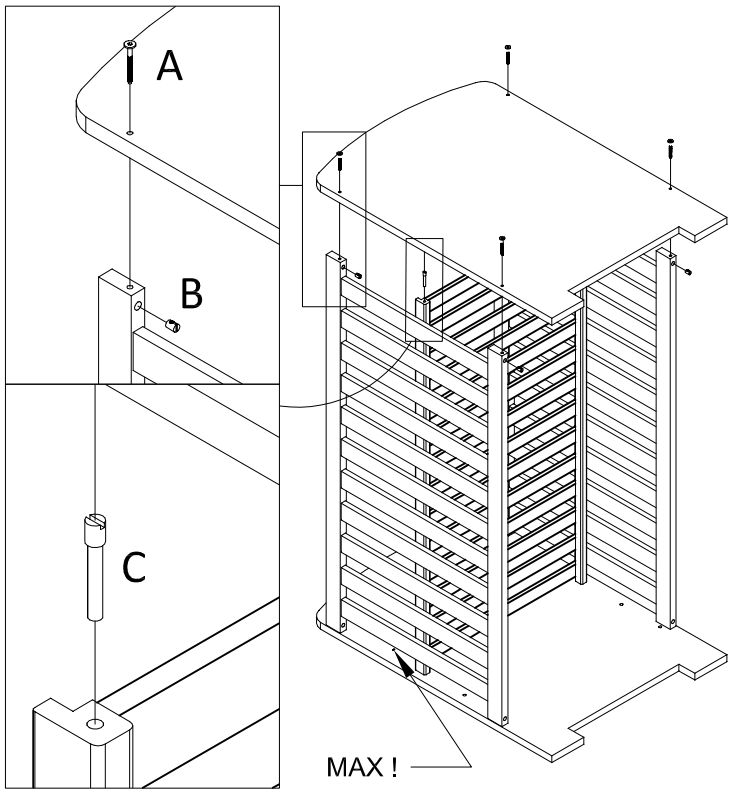
A
B
C
MAX !

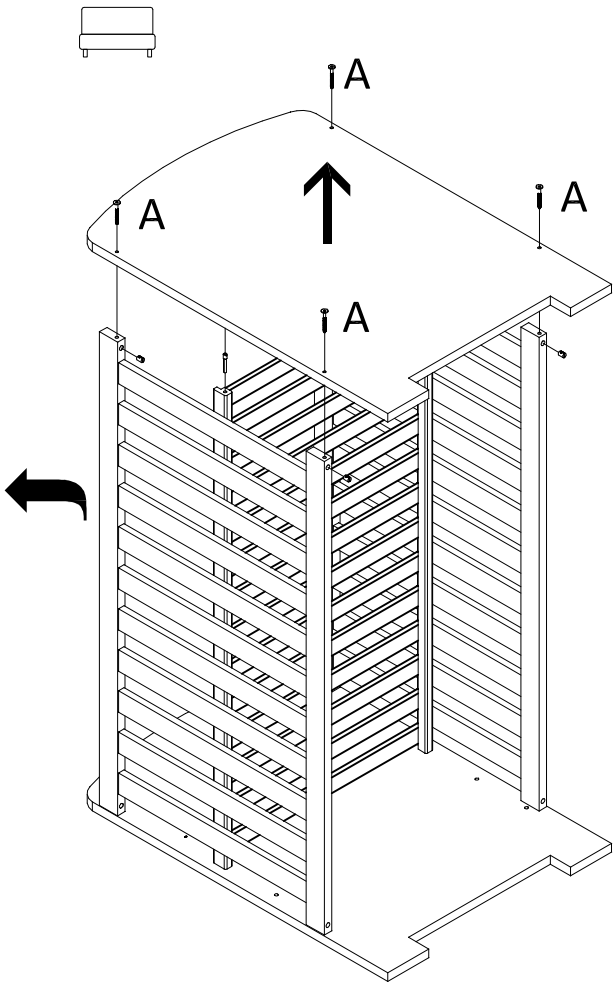
A
A
A
A

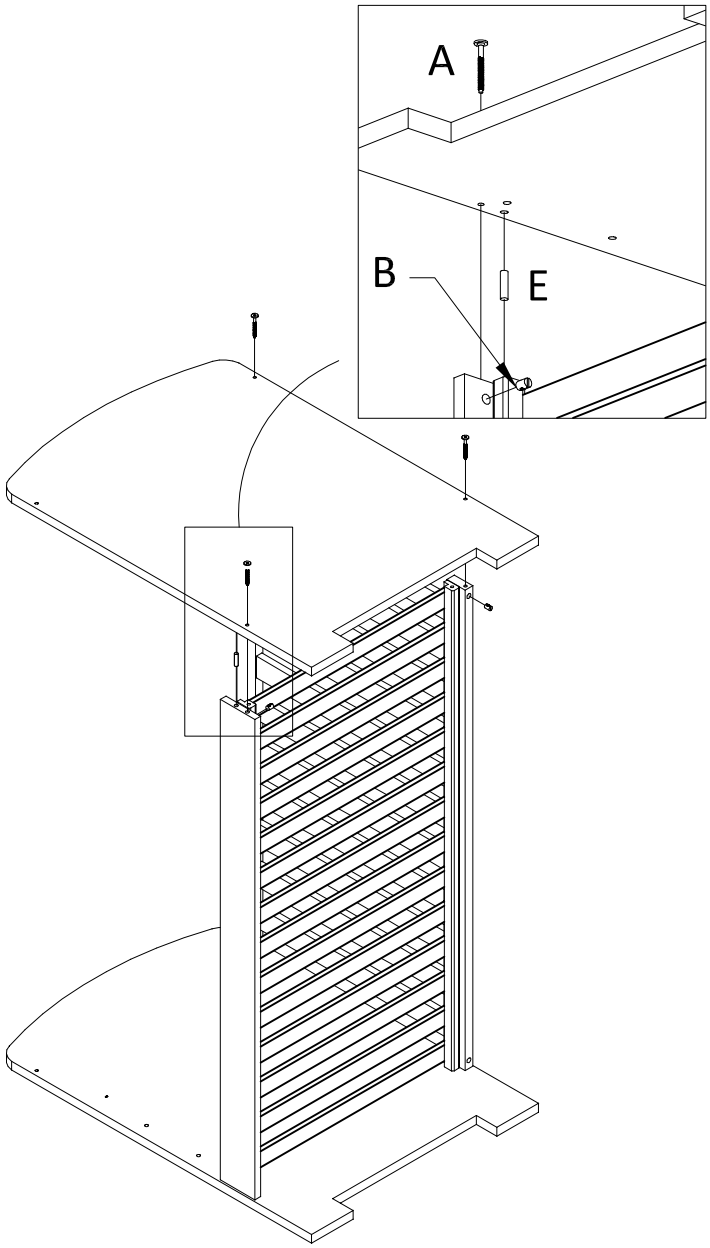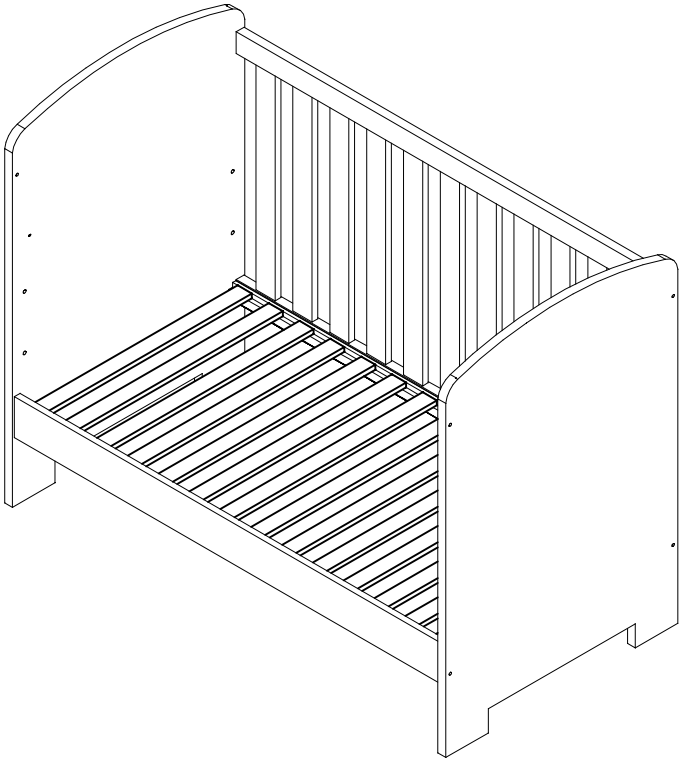
A
B
E